GEOMETILES®

Mini Set 3 Activities

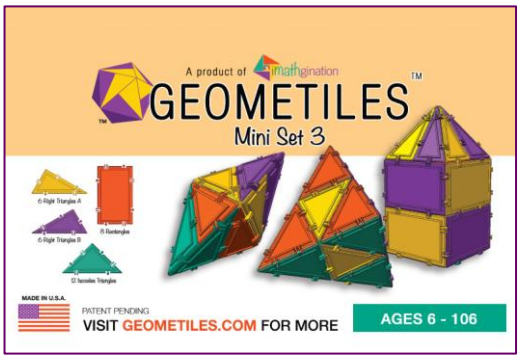

Welcome to Geometiles®!

Your Mini Set 3 contains 8 rectangles, 12 isosceles right triangles, and 12 scalene right triangles. This booklet contains some problems and brainteasers for you to try. The puzzles are all at different levels, so there's something for everyone.

Puzzle 1

- Make a square that is 1/4 purple, 3/8 yellow, and 3/8 green.
- Now make an equilateral triangle that is 1/3 purple, 1/2 green, and 1/6 orange.

Notes:

In the first problem, the student must first realize that she needs to make a square using a number of tiles that is divisible by 8. The only tiles available to her for making this larger square are the isosceles triangle tiles. She will need to use 8 of them to make a square

In the second problem, the student needs to understand that the equilateral triangle has to be made of 6 "equal" parts.

Puzzle 2

How many different equilateral triangular prisms can you make using the tiles in your set?

Puzzle 3

How many closed solids can you create out of the following scalene triangle tiles?

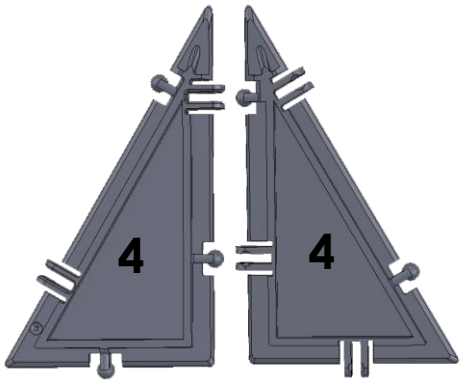

© 2017 Imathgination LLC

Version:11/15/17

Puzzle 4

How many closed solids can you create out of the following scalene triangle tiles?

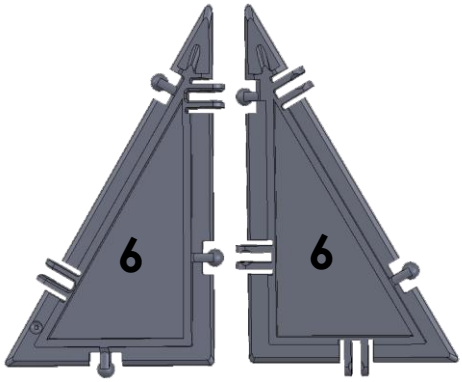

Answers to all puzzles are given on the following pages. Don't turn over the page unless you are ready to look at the answers!

© 2017 Imathgination LLC

Answers:

Puzzle 1

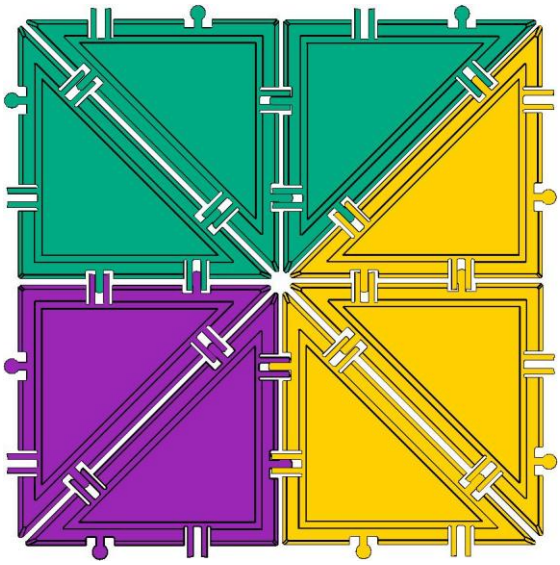

1/4 purple, 3/8 yellow, 3/8 green

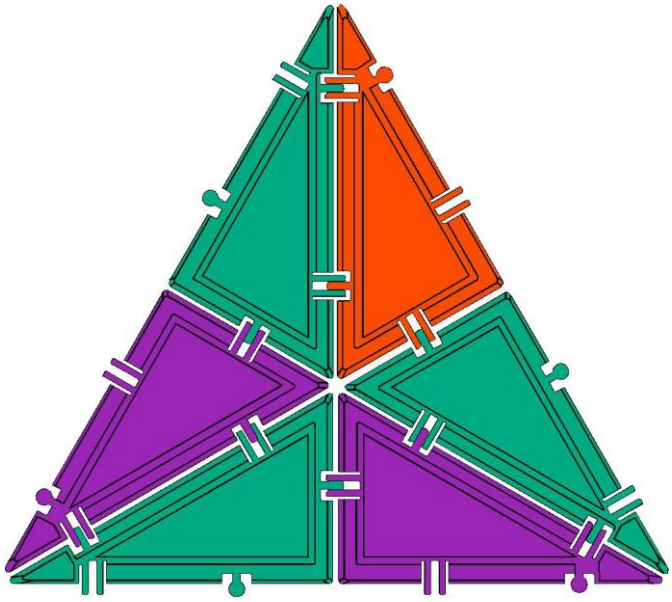

1/6 orange, 1/3 purple, 1/2 green

© 2017 Imathgination LLC

Puzzle 2

The base of the prism must be made of two scalene right triangles.

The variations are formed by the types of side walls the prism has. We can have square walls made of 4 isosceles triangles per wall. We can also have walls made of rectangles, with a 1 or 2 "stories" worth of rectangles. Or we can have a combination of rectangles and squares.

The best way to enumerate the possibilities is to stay organized. A prism can have 0, 1, or 2 rectangular stories. For each of these 3 possibilities, there are 2 possibilities for a square story: to have one or not to have one. So the total number of possible heights is 3 ×2 -1= 5. Why do we subtract 1? Because it's impossible to have a prism with 0 stories!

The solutions are shown below:

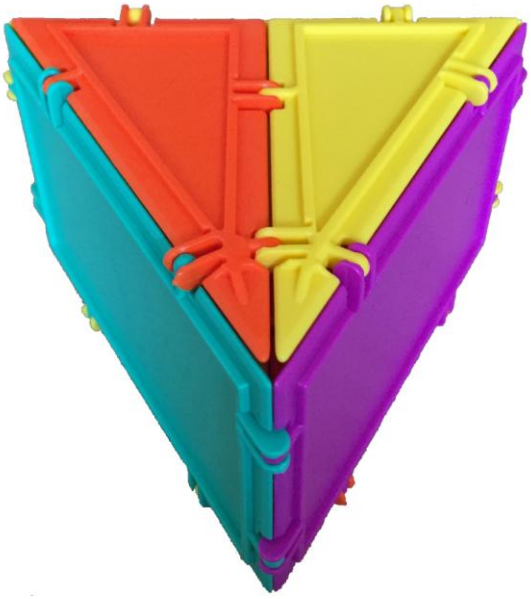

© 2017 Imathgination LLC

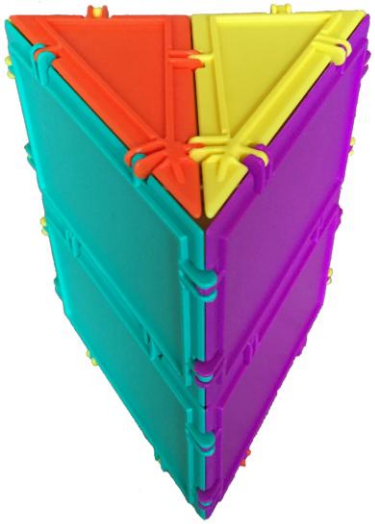

2 rectangular stories



1 large square story

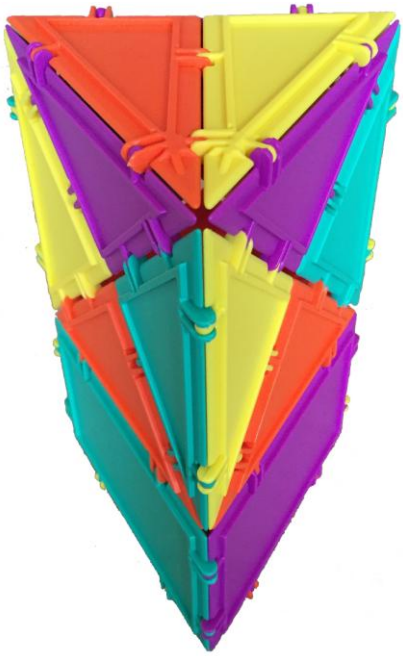

1 rectangular story and 1 square story



2 rectangular stories and 1 square story

© 2017 Imathgination LLC

Puzzle 3

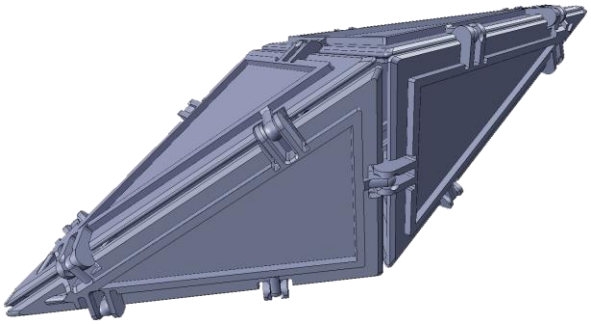

Octahedron

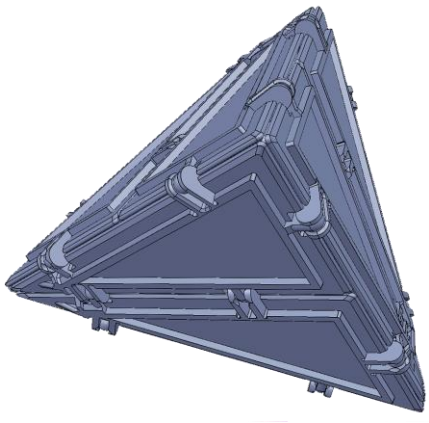

Regular tetrahedron

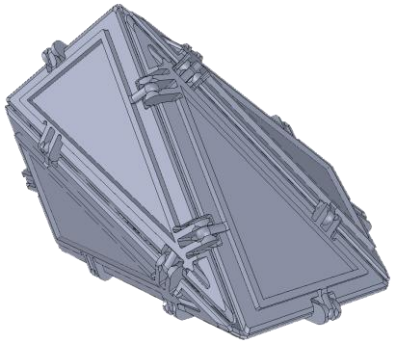

Ocatahedron

© 2017 Imathgination LLC

Puzzle 4

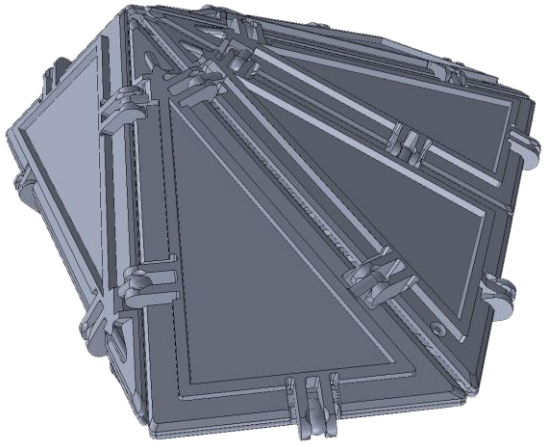

Pentagonal dipyramid

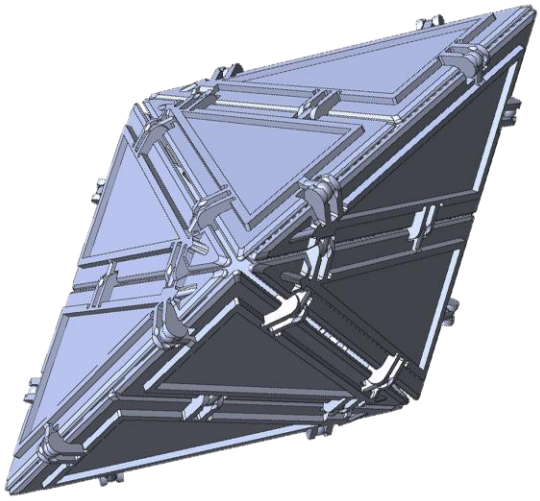

Double tetrahedron

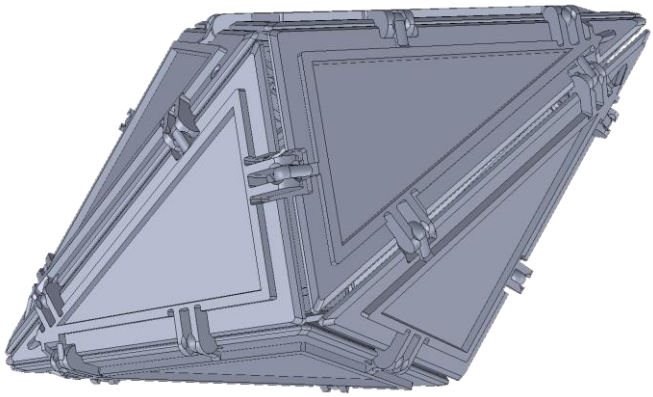

Scalenohedron

© 2017 Imathgination LLC